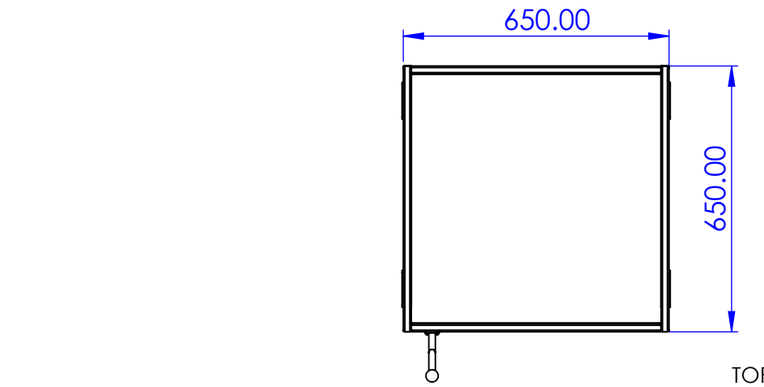

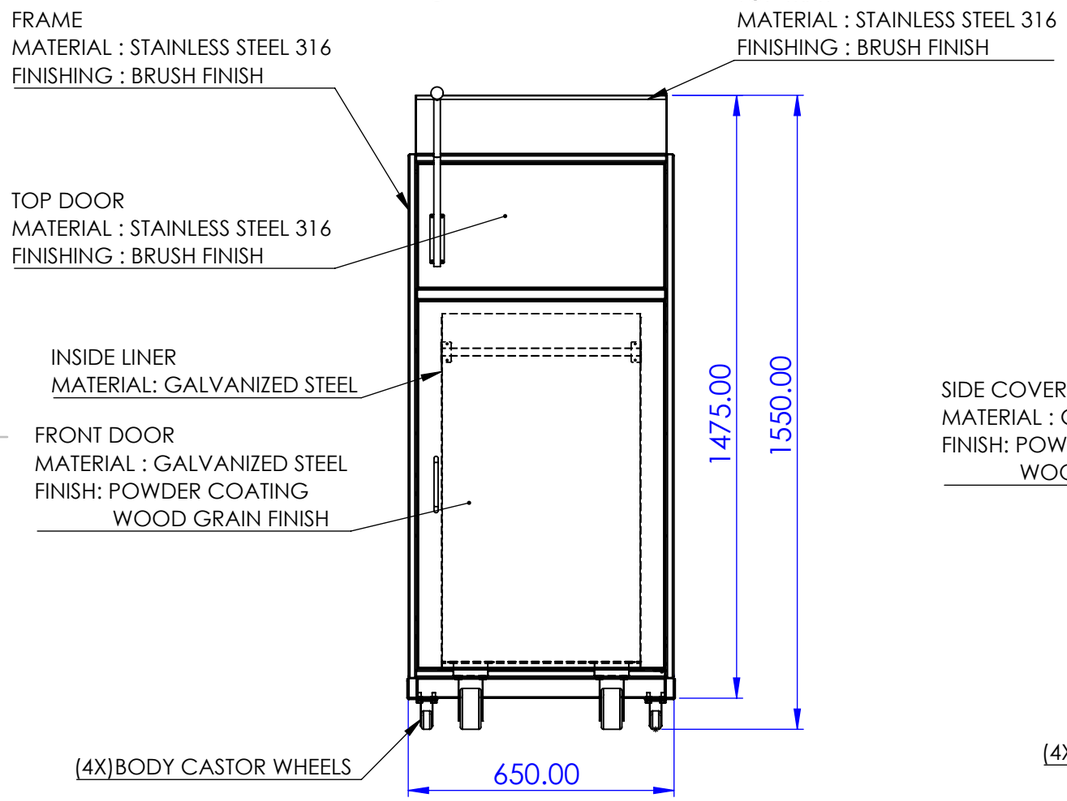

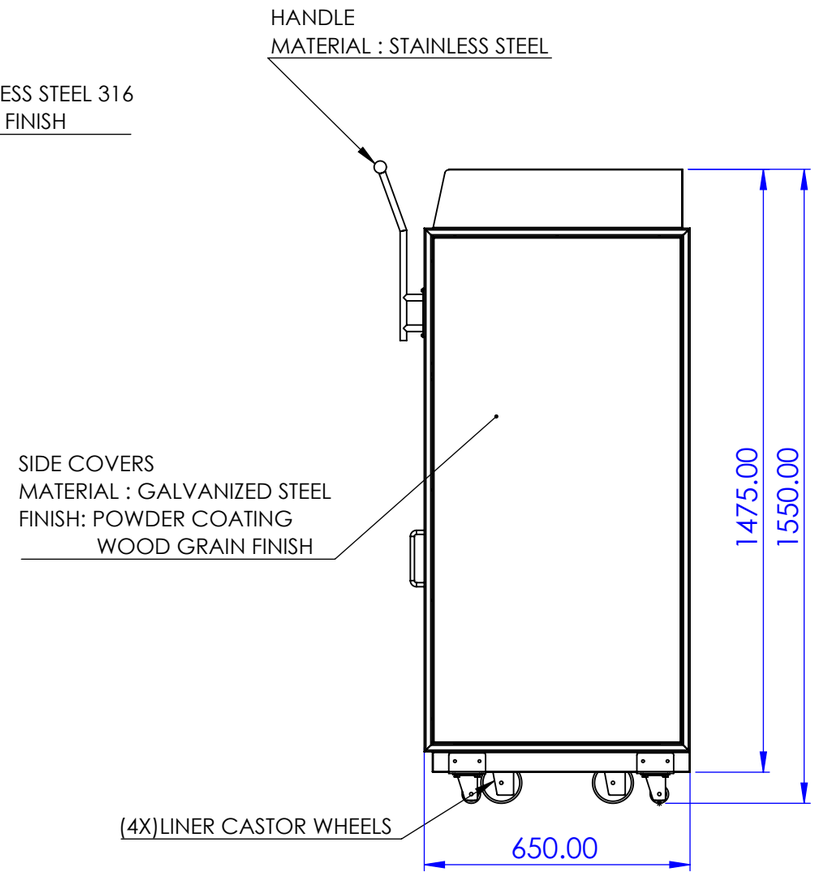

MODEL : KAVA FOOD COURT BIN (L 650 X W 650 X H 1550mm)
MATERIAL : STAINLESS STEEL 316 & GALVANIZED STEEL
FINISHING : BODY-BRUSH FINISH
SIDE PANELS & DOOR- POWDER COATING WOOD GRAIN FINISH
COLOR- AS PER REQUIREMENT
LINER CAPACITY: 200L
INSTALLATION : FREE STANDING

NOTE:Please note that by using this drawing in any format,you are accepting that Bluestream owns the copyright.You are licensed to use this drawing for any product on which Bluestreamme are tendering, and you should not knowingly allow others to copy this drawing.Obtain appropriate licenses from Bluestream if you intend to use the intellectual property rights of Bluestreamme in performing your obligations under any contract.Bluestreamme reserves the right to amend specifications without notice for product improvement.

UNLESS OTHERWISE SPECIFIED:
DIMENSIONS ARE IN MILLIMETERS
SURFACE FINISH:
TOLERANCES:+-5mm
LINEAR:
ANGULAR:

THIRD ANGLE PROJECTION

DEBURR AND BREAK SHARP EDGES

DO NOT SCALE DRAWING

REVISION: 0

	NAME	SIGNATURE	DATE
DRAWN			
CHK'D			
APPV'D			
APPV'D			
APPV'D			
APPV'D			
MFG			
Q.A			

TITLE:
KAVA FOOD COURT BIN

BLUESTREAM
ENHANCING URBAN ENVIRONMENTS

A3

Reference SO NO.:NA

SCALE:1:20

SHEET 1 OF 1